VOLVO PENTA

POWER FOR MARINE PROFESSIONALS

September 2016





Heading for the future

As we welcome you to our latest edition of Power For Marine Professionals, you'll see on our front cover a picture of the beautiful cruise boat, A-ROSA Aqua, sailing along one of Europe's iconic rivers. As you read inside, you can find out what it took to create a bright new future for this striking vessel.

For A-ROSA and other companies, repowering boats with new engines instead of overhauling existing ones is not an obvious choice. But when you take into consideration the total cost of ownership – of fuel consumption, emissions, warranty, and estimated downtime, the choice becomes easy. Each of the boat owners and fleet managers we meet inside this newsletter have their own unique reasons to select Volvo Penta as their preferred engine supplier, as is reflected in their individual stories.

Thanks to a unique co-operation at Seawork International 2016 with Njord Offshore, we were able to show and offer sea-trials of the impressive quadruple installation Volvo Penta IPS900 Quad in a 26-meter catamaran. The trade show in Southampton was a great success for us and this year there were 14 boats on display equipped with Volvo Penta power. From large catamarans to pilots, tenders, work-boats and RIBs, Volvo Penta is proven to be a company which is recognized as being a professional supplier with reliable engines for the marine commercial market.

We will keep looking to stay ahead of the competition with the continued development of new and unique products such as Volvo Penta IPS, and by making adjustments to suit future demands. As you'll see, our Senior Vice President, Johan Carlsson, talks about the products we have recently launched as well as what customers can expect from Volvo Penta in the coming years.

I hope you enjoy reading this issue of Power For Marine Professionals.

Jan-Willem Vissers
Director Marine Commercial
Region Europe



4 THE FORMULA ONE OF LIFEBOAT REPOWERING



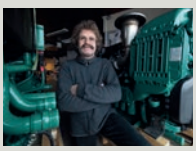

6 **Nordic fishermen power ahead with Volvo Penta**
Trawler-men on the Norwegian coast look forward to a lower cost of ownership.



8 **Volvo Penta improves fuel efficiency on the river**
With the help of Volvo Penta, A-ROSA Cruises has begun repowering five of its vessels.



10 **Taking in the sights along the Loire River**
Cruise along the Loire River in a paddleboat, powered by Volvo Penta engines.



11 **Exhibitions & Events**
Volvo Penta looks forward to the future.

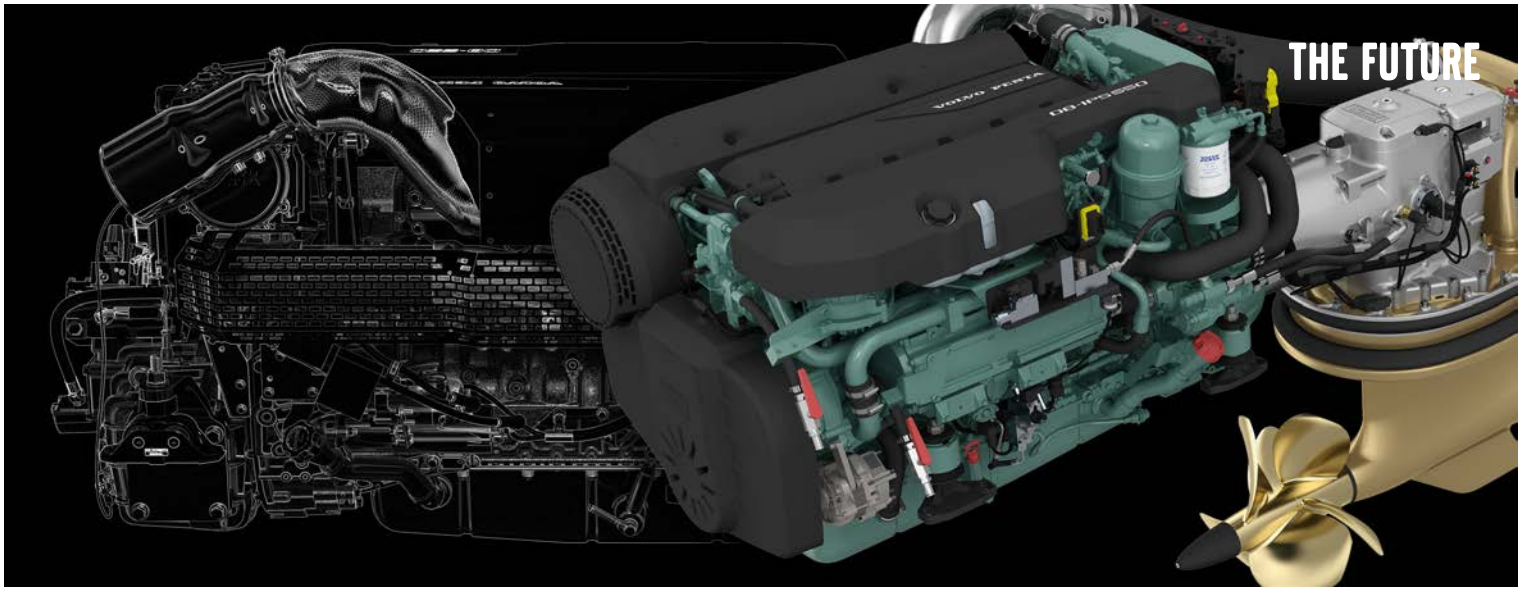

Productivity for the future

Volvo Penta leads the way in transforming innovative technologies into reality for marine commercial customers, says senior vice president, Johan Carlsson.

The commercial side of the marine industry is hugely important to Volvo Penta. The segment is growing, year on year, and that is because we continue to research innovative technologies and bring those ideas to fruition. It means that our customers can take advantage of our development and testing, and know that the engines and components they buy will work optimally, robustly, efficiently, and with comfort and convenience.

For any OEM and end-user customer in the commercial sector, reliability, performance, safety, fuel economy and profitability are key requirements. And increasingly, they're looking at additional aspects such as environmental impact and sustainability, and ease of use via integration. Volvo Penta is working towards solutions to address all these factors in creating state-of-the-art propulsion systems for today and pursuing the cutting-edge designs for tomorrow. Our goal is to bring ideas of the future into the present reality. As a world-leader in manufacturing diesel engines, our new models – D8 for inboard, IPS pod drive, and D8-IPS package – exemplify our expertise in creating propulsion solutions. You will see each of them on display at SMM, the international maritime trade fair in Hamburg, Germany.

Our 8-liter inboard diesel engine bridges the gap between the D6 and D11 models. It offers superb performance and reliability in a compact design, for a variety of high-speed work and patrol boats. With three power outputs, it has been designed to conform to US EPA Tier 3 emissions standards and IMO II and EU IWW.

Volvo Penta's Inboard Performance System (IPS) has been hailed as revolutionary in the marine industry. With its forward-facing twin counter-rotating propellers which sit below the hull, the IPS causes less drag, thereby improving performance and fuel consumption by up to 30 per cent when compared to traditional inboard engines. Our newest pod drive – IPS15 – reaches 550hp, is equipped with a new propeller series, and is optimized for operation of 20-40 knots.

And the D8-IPS package combines the best of both the new 8-liter engine and latest IPS pod, to offer an all-in-one propulsion system which accelerates quickly to planing level. It can be configured for twin or triple installation, and with individually steerable drives, provides precision maneuvering.

These are just some of the products that Volvo Penta has developed recently, which will consolidate our growing sales footprint in 130 countries, and they are underpinned by our international infrastructure of support. Our successes mean that we offer a range of exceptional engines and components for applications including coastguard and patrol boats, offshore energy supply vessels, sea and river cargo transport, passenger ferries, work-boats and tugs.

One of the main operational developments at Volvo Penta in recent months has seen us take a majority stake in Humphree, a technology company which specializes in the manufacture of interceptors, optimizing trim systems which reduce pitch and roll, steering alternatives to waterjet bucket deflection, sub-cavitating and base-ventilated stabilizing fins, and hydrodynamic services. We have also increased engine production at our plant in Vara, Sweden.

At Volvo Penta, we have an aptitude for creating safe and reliable power solutions – as evidenced by gaining relevant type approvals and classification certificates – as well as advancing innovative ideas and bringing them to life. We have pioneered the concept of integrated systems, including our Electronic Vessel Control (EVC) system.

Volvo Penta also benefits from the cutting-edge technology being developed and tested within the Volvo Group. Across the Volvo Group, the belief of electro-mobility as a way forward is gaining further traction. Volvo Buses is leading the way with the introduction of a fully electric bus, currently in operation in Gothenburg, Sweden. Automation is an area where the Volvo Group is also at the forefront of new technology. Earlier this year, Volvo Trucks experimented with 'platooning', whereby wireless connectivity between vehicles enabled co-ordinated controls, to test safety, traffic capacity and reduce fuel usage. It is this kind of development that we at Volvo Penta can leverage by our connection to the Volvo Group as a whole.

Of course skillful manufacturing and advancing technology have to be complemented by appropriate service and repair, and this is another area in which Volvo Penta excels. We have extended our Action Service facility to offer customer support 24 hours a day, 365 days a year, around the world and in 28 languages.

We are committed to offering the best options for the future and believe that Volvo Penta provides excellent business solutions for marine professionals.



Johan Carlsson,
Senior Vice President
of Planning, Product
Development and Purchasing,
Volvo Penta



Pullmantur's Horizon cruise-liner with two of its lifeboats

The Formula One of lifeboat repowering

With a tight timeframe for an ocean-going 'pit-stop', speed, efficiency and safety were the main requirements for Volvo Penta to fit new engines into the lifeboats of two of Pullmantur's illustrious cruise-liners.

With their leisurely atmosphere offering sunny holidays on the oceans, the large ships of cruise-liner company, Pullmantur, don't usually bring to mind fast-paced Formula One races.

But in repowering eight lifeboats across two ships, Volvo Penta had to exemplify the same attitude that Formula One pit-stop technicians display – precision-timing teamwork to ensure that changes were made quickly and safely.

With the cruise-liner repowering, Volvo Penta had a tight time-frame of only a few days to carry out the work while the ships were in harbor during the holiday voyages.

"The ships can't operate without lifeboats, of course, so we had to work when they were in port stop-overs," says Jose Luis Urresti, product specialist at Volvo Penta.
"Our technicians were like a Formula One team, working together quickly to make sure everything was done properly and safely."

Modern luxury

Pullmantur is a Spanish-based luxury cruise line, owned by Royal Caribbean Cruises, which operates around Europe and the Caribbean.
Its management team contacted Volvo Penta when two of its flagship cruise-liners – the Horizon and Zenith – needed new engines to fit into their lifeboats.

"Their engines were old and outdated," says Urresti. "So they asked us to see whether we would have new ones to fit the specification for speed, power output, dimensions and emissions, and to check the gear boxes and ratios. We suggested they use our D4-180 engines."

The D4-180 is a state-of-the-art diesel engine which offers high low-end torque for good maneuverability, minimal vibration, excellent fuel efficiency and low emissions due to the common



One of the lifeboats of the Horizon cruise-liner

rail fuel injection, and a low cruising rpm. Operated via Volvo Penta's Electronic Vessel Control system, it satisfies SOLAS demands; and it meets US EPA Tier 2 emissions regulations.

"We sent two technicians out to the cruisers in the Caribbean to check everything thoroughly to see how we would dismantle the old engines and mount new ones, and to assess how much it would cost," adds Urresti,

"They decided that a new frame would need to be fitted to accommodate the different dimensions.

"We had to work out the logistics of how and when to do the work as we had to fit in the repowering with the cruise itineraries and they had to be done quite quickly, of course, as the cruisers can't operate if the lifeboats are out of action."

Tailored solution

The repowering work was carried out by Camber Marine, a Volvo Penta Center based in Mallorca. The lifeboats were dismantled and the new engines fitted while the cruise-liners were in the Mediterranean ports of Barcelona, Palma and Alicante.

It took a couple of days to repower each lifeboat - around two weeks in total for each cruise-liner - which included carrying out sea trials with the ships' crews on board, to check that the boats could reach full speed when loaded and could still work if one engine stopped running.

The trials were required in order to receive safety certifications by Det Norske Veritas (DNV).

Good reputation, reliable service

Urresti says: "The work went very well. We have a good reputation for our engines and our service and Pullmantur know that they can rely on us. We hope to do more repowering work with them."

Roberto Marcellino, technical fleet director at Pullmantur, says: "We had several meetings with Volvo Penta to discuss our requirements and check all the issues that could arise. The engines we had were old and in a wretched condition, with no spare parts available on the market.

"We needed to replace them with new technology, to cope with all the demands of current legislation, and we're pleased with the engines and service that Volvo Penta provided."



Repowering of a lifeboat with a Volvo Penta D4-180 engine



Fisherman Terje Mathisen inspects the underside of his boat

Nordic fishermen power ahead with Volvo Penta

Trawler-men on the Norwegian coast look to a future of increased fuel efficiency and lower costs as they repower their fishing boats with Volvo Penta engines.

It's not an easy job to be a fisherman in Nordic waters – being out on the seas in all conditions, from pre-dawn to sunset, is an arduous task. As such, the men who dedicate their lives to keeping the region supplied with fish for sale, need to know that they can rely on their boat at all times. And that means knowing that their engine will consistently work at optimum levels to power their boat.

A group of fishermen in the Sandefjord area, south west of Oslo, are looking ahead to a future of increased efficiency, after repowering their boats with Volvo Penta engines. They have been using competitors' engines (and some older Volvo Penta models), but as time has come for a change, they've decided to upgrade with newer Volvo Penta engines for a better output.

Power for reliability

"Reliability is the most important thing for a boat, so that it works well all the time and has the right amount of power," says fisherman Terje Mathisen. "Fuel economy is also very important and I'm pleased that this new engine can fit into my boat easily without taking too long or costing too much to change."

Hard day's work

Mathisen has been fishing for 35 years, after following his father and grandfather into the business, and catches around 60 tons of fish and seafood per year. He leaves the harbor at 3.30am to sail out into the seas around southern Norway and begins trawling for shrimp, lobster and fish such as flounder.

Mathisen has been using an 11-liter engine from another manufacturer for many years, but is now repowering with a 9-liter Volvo Penta engine – the D9 MH (300hp).

"I use a lot of fuel each year, so as this engine will have better fuel economy, it will be much cheaper," he says.

"My brother has a boat and changed to Volvo Penta a couple of years ago, so I know that they are good engines."

Cost effective

Olaf Thon is another fisherman from Sandefjord who was keenly anticipating the repowering of his boat. He too has been trawling for nearly four decades, and has also switched to the same D9 engine.

"The new engine is a little smaller than I had before, but it's more cost effective, and as it has

electronic controls it's easier to use," he says.

"It will be better for pollution in the ocean too. Everyone has to do their best for the environment. I am pleased to be using Volvo Penta again."

Staying on the water

The men are among a group of customers of Framnes Marine & Industriservice, a Volvo Penta Service location in Sandefjord. They are each repowering their boats with Volvo Penta's D9 MH and D13 MH engines.

For Frode Christiansen, the choice to change his old 14-liter engine for Volvo Penta's 13-liter model was partly based on advice given by the manager of the Framnes center, Kai Tveitan.

"I know Kai and this place. Volvo Penta has done a lot to improve its engines in recent years and I see that this will be very good. It will be cheaper to run and will be quieter, and I think it will function well.

"Service is very good here. Every day our boats are laying in the dock it costs us money, so they do a lot to help us. If there is an issue on Friday night or Sunday, we can still call them and they will help us. That is very special."

He adds: "I also have a sail boat with a Volvo Penta engine, so I know they are good."

Fit for purpose

The D9 is a compact, six-cylinder, heavy duty marine engine, with charge-air cooling, and is suitable for fishing boats, small passenger ferries, and other workboats.

The D13 is designed to have increased power-to-volume ratio of its predecessors, with low fuel consumption, low emissions, and high torque at low rpm.

The trawler-men from Sandefjord operate their boats individually. Good servicing and the availability of spare parts are further reasons for them choosing to repower with Volvo Penta.

Tveitan and his technicians at the Framnes center also advised trawler-man Øyvind Johansen to repower with a nine-liter Volvo Penta engine when his previous one came to the end of its life cycle. He has now been operating his D9-300 for nearly 800 hours.

"I appreciate the service installation work," he says. "It's a strong engine that fits the boat and is the right choice for me."



A mechanic at work repowering a boat



Frode Christiansen among the D13 MH engines



Boats in the dry dock at Framnes Marine & Industriservice



The A-ROSA Aqua

Volvo Penta improves fuel efficiency on the river

With the German government aiming to cut greenhouse gas emissions by 40 per cent by 2020, subsidies are being offered to encourage companies to convert to more eco-friendly practices. Now, with the help of Volvo Penta, river holiday company A-ROSA Cruises has begun repowering five of its vessels with 13-liter engines.

German-based A-ROSA Cruises presents sightseeing and cultural tours to leisure passengers along some of Europe's most scenic rivers, including the Rhine, Rhône, Seine, Moselle and Danube.

The company operates voyages that take in fascinating cities such as Amsterdam, Vienna, and Budapest. Some routes travel as far south as the Black Sea, and each of the 11 cruisers offers luxury all-inclusive accommodation.

Better performance with fewer emissions

A-ROSA currently has a range of Volvo Penta's 12-liter marine diesel engines installed in five of its river cruisers, and has repowered its first cruiser, the A-ROSA Aqua. It was not an obvious choice of the operator to repower the boats instead of overhauling the existing D12 engines.

"The main reason to go for repowering instead of overhauling the existing D12 engines, were the fuel and CO_2 savings for A-ROSA," Jürgen Kühn, marine commercial account manager at Volvo Penta.

"If you save five per cent of fuel at 3,500 running hours per year, the return on investment will be seen within three to four years of operation. An additional plus point for repowering is the attractive extended three-year warranty on the new D13 engines."

He adds: "In actual fact, A-ROSA claims fuel savings of five-to-seven per cent in real life which will reduce the return on investment to two to three years."



An engine is lowered into the boat for re-powering

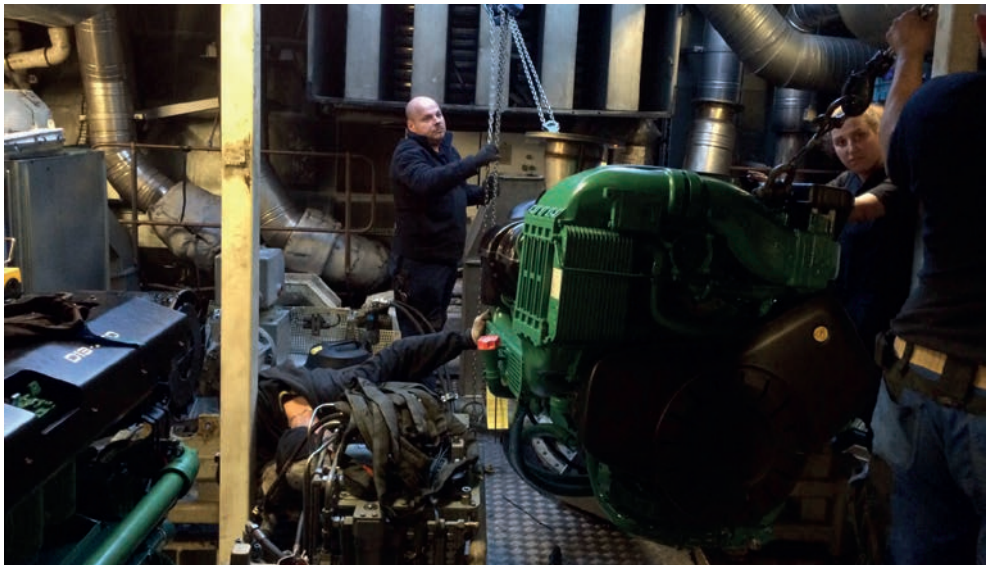

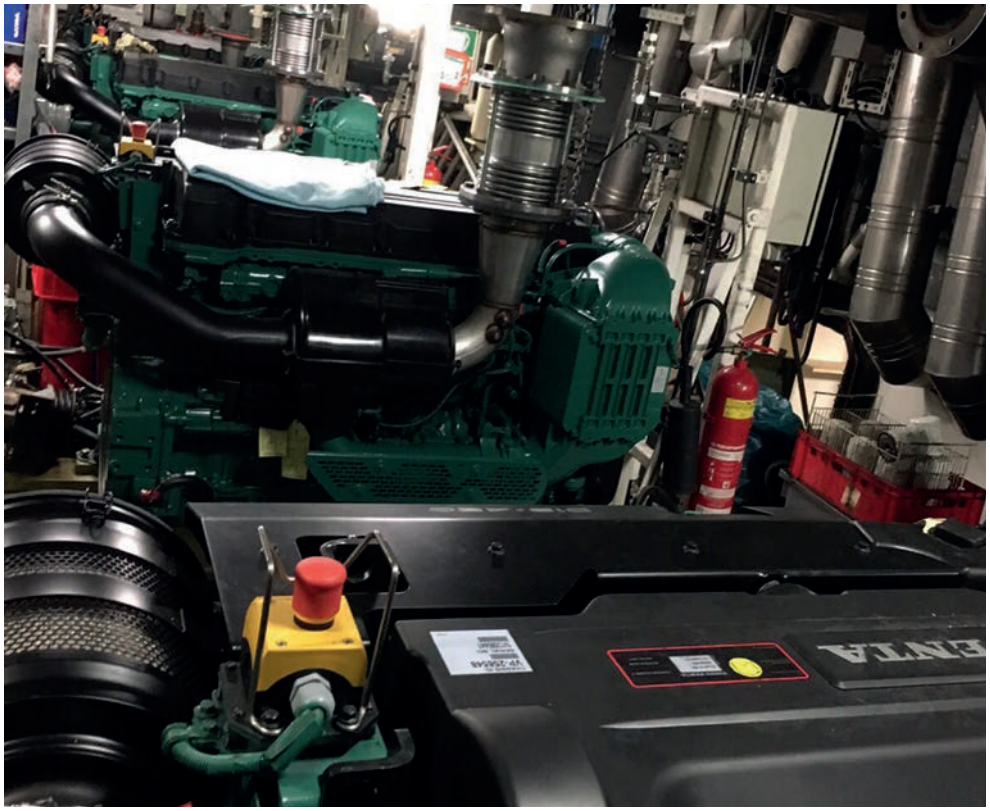

Fleet requirements

A-ROSA has been in operation since 2000. The 135m Aqua cruiser will be repowered with four new D13 engines, as will another four vessels in the A-ROSA fleet. The engine achieves high torque at low rpm which facilitates ease of maneuvering. Its mid-position, twin-entry turbo offers pulse charging, and combined with inlet valve timing, this allows a reduction in engine temperature and mechanical stress.

The D13-500 MH is equipped with a two-circuit cooling system, whereas the previous D12 engine had only one which was connected to the box-cooler on board.

By using a heat exchanger version of the D13 model, the existing box-cooler can still also be used to enable a smooth replacement without large-scale structural changes. The system offers a smart and easy solution.

The plate heat exchanger also enables adequate cooling to improve durability.

Auxiliary power

Each cruiser will also contain two Volvo Penta D16 MG auxiliary engines – the first of which were overhauled in 2014 after more than 23,000 running hours – along with one D16 MH bow-thruster engine that is used for propulsion, and a D9 MH engine that provides emergency power generation.

"Volvo Penta is a valued supplier for A-ROSA because we can deliver the engine range needed for larger river cruisers," says Kühn.

"That's why A-ROSA chose Volvo Penta engines for its repowering project – we can provide everything, from propulsion engines to complete marine genset engines."

He continues: "A-ROSA has found a perfect partnership for service with our dealer Warnow-Werkstatt Paap + Sohn Schiffs- und Yachtservice, giving them excellent 24/7 service wherever the boat is on its journey."



A Volvo Penta D13 MH engine



The Loire Princesse is an impressive sight on the river

Taking in the sights along the Loire River

Culture vultures and gastronomy-lovers can take full advantage of visiting picturesque towns and the beautiful French countryside as they cruise along the Loire Valley in a paddleboat, powered by Volvo Penta engines.

When French naval architect company, Stirling Design International, was commissioned to create a new boat to replicate the classic paddlewheel steamers of days gone by, the designers opted for Volvo Penta's 13-liter engines as the best choice.

With their high turbo pressure at low rpm, the twin D13-500 MH engines provide excellent acceleration, high torque and low emissions. The fuel injectors offer variable needle opening pressure and produce less noise than comparable engines.

Classically modern

Produced for cruise-line company, CroisiEurope, the Loire Princesse was built by an alliance of ship-building manufacturers through the French-based Neopolia Marine network. The boat features a pair of side-mounted bucket wheels which are powered by the two Volvo Penta engines. The powerful, durable and smooth D13-500 MH models are ideal for commercial use.

Powering ahead

The bucket wheel paddles are 4.7m in diameter and 1.8m wide, and drive the 700-tonne cruiser. They turn at 42 revolutions per minute, allowing the boat to reach speeds of up to 15km/h. The 370kW diesel engines are complemented by hydraulic couplings which control start-up without shock-loading the power transmission system. They feature high torque at low rpm which facilitates good maneuverability; and an inlet valve reduces engine temperature and mechanical stress, allowing for high boost pressure.

Due to the variable water-levels on the Loire River, the weight and height of the boat were particular considerations during design. The Loire Princesse has a draft of 70cm and the traditionally-inspired paddle-steamer chimney can rise to a height of 7.75m (not viewable on accompanying pictures). The fixed height of the boat, however, is only 5.3m high, to allow for passage under low bridges. And the 89m-long body of the main deck is made of lightweight aluminum.

"During the entire planning and construction phase, we looked at where we could make weight savings," says designer Thibaut Tincelin. "That is why we decided to have a direct mechanical drive for the compact and heavy loaded paddlewheels, and aluminum superstructure."

Award winner

The Loire Princesse sails between Saint-Nazaire and Angers, in north west France, and can accommodate 96 passengers. Private and communal spaces are both well-equipped for guests who like home comforts on board.

The boat has received a Shippax Award in recognition of its modern design concept. Internationally renowned shipping information provider, Shippax, judged that the Loire Princesse's innovative propulsion system coupled with a low flat hull provides excellent year-round navigational capabilities on the Loire River – unlike more conventionally powered boats.

Cordial relationship

CroisiEurope has been collaborating with Volvo Penta for four decades and now has 42 of the manufacturer's engines in its comprehensive fleet. It is Europe's biggest river cruise line, carrying passengers on the largest routes across France, Germany, Spain, Italy and Belgium.

"We're pleased to have built a long-standing and firm relationship with such a well-respected cruise-liner company," says Joell Haber, marine commercial product specialist at Volvo Penta.







Exhibitions & events

Volvo Penta has had a successful year in the marine commercial sector. At Seawork International trade show in June, one of our UK customers – Njord Offshore – displayed its latest crew transfer vessels, each powered by four Volvo Penta IPS900 Quad drives. The show in Southampton, UK, saw more than 120 people from the industry take part in a sea-trials of Njord Offshore's boat powered by Volvo Penta. We now look forward to meeting customers at the following marine trade fairs throughout the rest of 2016.

SEPTEMBER

SMM Hamburg
September 6-9
Hamburg, Germany
www.smm-hamburg.com

SMM Hamburg is the leading international maritime trade fair. Attended by the world's foremost ship-builders, operators, service providers and ancillary equipment manufacturers, the show hosts more than 2,100 exhibitors and 50,000 visitors.

Messe Kalkar
September 27-28
Kalkar, Germany
www.messekalkar.de

Messe Kalkar focusses on shipping, technical innovations and logistics. Located beside the River Rhine and close to the border with the Netherlands, the fair offers opportunities for German and Dutch companies to discuss trading collaborations.

OCTOBER

Euronaval 2016
October 27-21
Paris, France
www.euronaval.fr

Euronaval is dedicated to exploring naval technology for the future. Exhibitors and visitors from around the world are able to promote their latest developments, keep up to date with what's happening in the market, and build up networks of suppliers and customers.

Offshore Energy
October 25-26
Amsterdam, The Netherlands
www.offshore-energy.biz

The annual event features both an exhibition and a conference program. It focusses on the whole of the offshore energy industry – oil, gas and marine – and addresses the technical, operational and commercial challenges faced by growth in the industry.

Skipper Expo
October 28-29
Bournemouth, UK
www.maramedia.ie/bournemouth-home

Hosted by Mara Media publishing and events company, Skipper Expo is attended by boat owners and fishermen, boating suppliers, fleet managers, and dockyard operations companies. The show enables visitors to seek out the latest boating components and marine technologies, and discuss operational possibilities with new suppliers.

NOVEMBER

International WorkBoat Show
November 30 - December 2
New Orleans, USA
www.workboatshow.com

Held every year in New Orleans, the show attracts thousands of visitors from the marine commercial industry, to learn about new trends, discover innovative products and solutions, and attend networking events. The show also features a conference on topics such as regulatory compliance and operational best practices.

English 09-2016

HEAVY DUTY VERSATILITY

Seamless integration – efficient operation

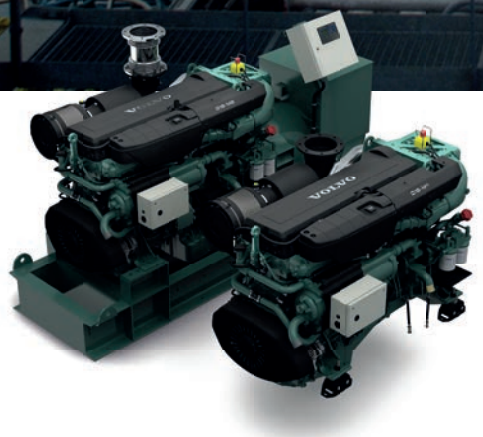

A seamless, complete power package. A perfect base for a multiple engine application, a diesel electric installation or a hybrid solution – heavy duty propulsion is rapidly transforming towards flexible and fuel efficient drive systems. Add extended coverage beyond limited warranties and enjoy productivity, trouble-free operation and peace of mind.

www.volvopenta.com/commercial

VOLVO PENTA D16

VOLVO PENTA